GENERAL ELECTRICAL NOTES:

1. DRAWINGS ARE DIAGRAMMATIC. ALL DIMENSIONS SHOWN ARE APPROXIMATE. ALL LOCATIONS SHALL BE FIELD VERIFIED.
2. ALL WORK SHALL BE IN CONFORMANCE WITH THE NATIONAL ELECTRICAL CODE - LATEST EDITION ADOPTED BY GALENA ILLINOIS, GALENA AMENDMENTS, LOCAL/MUNICIPAL CODES, AND THE AUTHORITY HAVING JURISDICTION.
3. IT IS THE INTENT OF THESE DOCUMENTS TO COMPLY WITH THE APPLICABLE CODES. WHERE DISCREPANCIES OCCUR, NOTIFY THE ENGINEER/ARCHITECT IN WRITING FOR INTERPRETATION. CORRECT ANY INSTALLATION THAT FAILS TO COMPLY WITH THE CODES AND STANDARDS AT NO ADDITIONAL COST TO THE OWNER.
4. CONTRACTOR SHALL PROVIDE ALL WORK NECESSARY INCLUDING ALL LABOR, MATERIALS, PERMITS, TAXES, FEES, INSPECTIONS, HARDWARE, AND COST FOR INSTALLATION FOR A COMPLETE AND OPERATIONAL SYSTEM. ALL WORK SHALL BE IN COMPLIANCE WITH LOCAL CODES, ORDINANCES RULES, AND PUBLIC AUTHORITIES WHICH HAVE JURISDICTION OF THE PERFORMANCE OF THIS WORK.
5. COORDINATE ELECTRICAL INSTALLATION WITH ALL TRADES PRIOR TO INSTALLATION. IF ELECTRICAL WORK INSTALLED INTERFERES WITH OTHER TRADES AFTER INSTALLATION, THE CONTRACTOR SHALL MAKE ALL NECESSARY CHANGES TO CORRECT THE CONDITION AT NO ADDITIONAL COST TO THE OWNER.
6. DATA AND TELEPHONE JUNCTION BOXES SHOWN ON DRAWINGS ARE DIAGRAMMATIC. COORDINATE EXACT PLACEMENT OF ALL DEVICES WITH OWNER PRIOR TO INSTALLATION. ANY DATA WIRES SHALL BE RUN WITH PLENUM RATED CABLES ONLY.
7. COORDINATE THE FINAL HEIGHT OF ALL EQUIPMENT WITH THE ARCHITECT PRIOR TO INSTALLATION. VERIFY DOOR SWING PRIOR TO INSTALLATION OF ALL SWITCH BOXES. RELOCATION OF ANY JUNCTION BOX TO AN ADJACENT LOCATION PRIOR TO INSTALLATION, SHALL BE DONE WITH NO ADDITIONAL COST TO THE OWNER.
8. ALL CONNECTIONS TO EQUIPMENT SUBJECT TO MOVEMENT OR VIBRATION SHALL BE LIQUID TIGHT FLEXIBLE METAL CONDUIT, NOT LESS THAN 12" IN LENGTH, NOR GRATER THAN 36" IN LENGTH.
9. ALL CONDUIT PENETRATIONS SHALL BE SEALED WITH APPROPRIATE CONDUIT SEALING MATERIAL.
10. ALL CABLE SHALL UTILIZE COPPER CONDUCTORS.
11. EACH SINGLE PHASE BRANCH CIRCUIT CONDUCTOR SHALL HAVE A DEDICATED NEUTRAL BACK TO THE PANELBOARD.
12. ALL POWER AND LIGHTING CIRCUITS SHALL BE A MINIMUM (2)#12, AND (1)#12 GROUND, IN 3/4" CONDUIT, UNLESS OTHERWISE NOTED.
13. ALL CONTROL WIRING SHALL BE NOT LESS THAN (2)#14, (1)#14 GROUND, IN 3/4" CONDUIT, UNLESS OTHERWISE NOTED.
14. ALL CABLES INSTALLED IN AIR HANDLING PLENUMS SHALL BE PLENUM RATED CABLES.
15. HOME RUNS SHALL NOT BE COMBINED IN A RACEWAY UNLESS SHOWN ON THE CONTRACT DRAWINGS. SINGLE PHASE BRANCH CIRCUIT HOME RUNS MAY BE COMBINED AT THE CONTRACTOR'S DISCRETION, NOT GREATER THAN (3) PHASE CONDUCTORS, (3) NEUTRAL CONDUCTORS, AND GROUNDING CONDUCTOR.
16. SUPPORTING WIRE FOR THE SUSPENDED CEILING GRID SHALL NOT BE USED AS RACEWAY SUPPORT.
17. REFER TO THE ARCHITECTURAL DRAWINGS FOR LOCATIONS BUILDING EXPANSION JOINTS. ALL CONDUITS CROSSING EXPANSION JOINTS SHALL BE INSTALLED WITH EXPANSION FITTINGS. UNLESS THE CONDUIT IS BELOW SLAB IN THE COMPACTED GRANULAR FILL. EXPANSION FITTINGS SHALL BE INSTALLED IN ACCORDANCE WITH THE N.E.C., AND MANUFACTURE'S WRITTEN RECOMMENDATIONS.
18. TO REDUCE NOISE BETWEEN WALLS, CONTRACTOR SHALL:
    A. AVOID INSTALLING POWER RECEPTACLES OR DATA OUTLETS LOCATED BACK TO BACK.
    B. WHERE OUTLETS ARE REQUIRED TO BE LOCATED BACK TO BACK, CONTRACTOR SHALL PROVIDE SOUNDPROOFING MATERIAL BETWEEN JUNCTION BOXES.
19. INDOOR CONTROL EQUIPMENT ENCLOSURES SHALL BE NEMA 1 RATED, UNLESS OTHERWISE NOTED. ALL EXTERIOR ENCLOSURES SHALL BE NEMA 3R, UNLESS OTHERWISE NOTED.
20. ALL VOICE/DATA CABLING, SECURITY CONTROL SYSTEM AND ALL OTHER LOW-VOLTAGE SIGNAL CABLING SHALL BE INSTALLED IN A COMPLETE RACEWAY SYSTEM.
21. PENETRATIONS THROUGH FIRE RATED WALLS BY DIVISION 26 CONTRACTOR SHALL BE SEALED WITH APPROPRIATE FIRE PROOFING MATERIAL TO RESTORE FIRE RATING. SEE ARCHITECTURAL DRAWINGS FOR FIRE RATED WALLS.
22. THESE DRAWINGS SHALL NOT BE SCALED TO OBTAIN DIMENSIONS. IF THE DIMENSIONS CANNOT BE DETERMINED BY THE INFORMATION GIVEN, CONTRACTOR SHALL CONTACT THE ENGINEER FOR REQUIRED INFORMATION
23. PERIODIC SITE OBSERVATION BY THE ENGINEER IS SOLELY FOR THE PURPOSE OF DETERMINING IF THE WORK OF THE CONTRACTOR IS PROCEEDING IN ACCORDANCE WITH THE ELECTRICAL CONTRACT DOCUMENTS. THE LIMITED SITE OBSERVATION SHOULD NOT BE CONSTRUED AS EXHAUSTIVE OR CONTINUOUS TO CHECK THE QUALITY OR QUANTITY OF THE WORK, BUT RATHER PERIODIC IN AN EFFORT TO GUARD THE OWNER AGAINST DEFECTS OR DEFICIENCIES IN THE WORK OF THE CONTRACTOR.
24. THE INFORMATION CONTAINED ON THE ELECTRICAL DRAWINGS IS IN ITSELF INCOMPLETE AND VOID UNLESS USED IN CONJUNCTION WITH ALL OTHER DRAWINGS AND SPECIFICATIONS. THE WORK SHALL COMPLY WITH APPLICABLE STANDARDS, CODES, ETC., AND SHALL BE CONSIDERED THE CONTRACT DOCUMENTS AND WITH ALL THE INFO REFERENCE, WHICH THE CONTRACTOR CERTIFIES KNOWLEDGE OF BY SIGNING THE CONTRACT.
25. CONTRACTOR IS TO ASSUME FULL RESPONSIBILITY, UNRELIEVED BY REVIEW OF SHOP DRAWINGS OR PERIODIC OBSERVATION OF CONSTRUCTION, FOR COMPLIANCE WITH THE CONTRACT DOCUMENTS, FOR DIMENSIONS TO BE CONFIRMED AND CORRELATED NOT THE JOB SITE AND BETWEEN INDIVIDUAL DRAWINGS OR SETS OF DRAWINGS FOR FABRICATION PROCESSES AND CONSTRUCTION TECHNIQUES (INCLUDING EXCAVATION, SHORING, TRENCHING, ETC.) TO DESIGN PARTS TO BE INSTALLED IN THE PROPER LOCATION OF THE VARIOUS TRADES, AND FOR SAVE CONDITIONS OF THE JOB SITE. VARIATIONS IN FIELD CONDITIONS RELATIVE TO THE CONTRACT DOCUMENTS SHALL BE REPORTED TO THE ENGINEER AS SOON AS THEY ARE FOUND. WORK SHALL NOT PROGRESS UNTIL WRITTEN PERMISSION FROM THE ENGINEER IS OBTAINED.

ELECTRICAL ABBREVIATIONS

A	AMPERES
AAC	ABOVE ACCESSIBLE CEILING
ACCU	AIR COOLED CONDENSING UNIT
AFF	ABOVE FINISHED FLOOR
AFG	ABOVE FINISHED GRADE
AHU	AIR HANDLING UNIT
ASD	ADJUSTABLE SPEED DRIVE
ATS	AUTOMATIC TRANSFER SWITCH
BLD	BUILDING
BLKG	BLOCKING
BKR	BREAKER
C	CONDUIT
CKT BKR	CIRCUIT BREAKER
CLG	CEILING
CUH	CABINET UNIT HEATER
CWP	CHILLED WATER PUMP
D	DEDICATED CIRCUIT, NO OTHER OUTLETS SUPPLIED BY THIS CIRCUIT (ISOLATED GROUND)
DMC	DIMMER MASTER CONTROLLER
DN	DEDICATED CIRCUIT, NO OTHER OUTLETS SUPPLIED BY THIS CIRCUIT. (SEPERATE NEUTRAL)
	DEDICATED CIRCUIT WITH LOCK ON BREAKER
DPST	DOUBLE POLE SINGLE THROW
E/R	EXHAUST/RETURN FAN
EC	ELECTRICAL CONTRACTOR
EF	EXHAUST FAN
EM	EMERGENCY
EMT	ELECTRICAL METALLIC TUBING
	(THINWALL)
EQUIP	EQUIPMENT
ES	ENERGY SAVING
ETR	EXISTING TO REMAIN
EWC	EXISTING WATER COOLER
F	FUSE
FAA	FIRE ALARM REMOTE ANNUNCIATOR
FACP	FIRE ALARM CONTROL PANEL
FBO	FURNISHED BY OTHERS
FCU	FAN COIL UNIT
FFA	FROM FLOOR ABOVE
FFB	FROM FLOOR BELOW
GC	GENERAL CONTRACTOR
GF	GROUND FAULT PROTECTED
HID	HIGH INTENSITY DISCHARGE
HP	HORSEPOWER
HPS	HIGH PRESSURE SODIUM
HWC	HEAVY WALL CONDUIT
HWH	HOT WATER HEATER
IDF	INTERMEDIATE DATA FRAME
IG	ISOLATED EQUIPMENT GROUNDING RECEPTACLE CONNECTED DIRECTLY TO THE GREEN GROUNDING SCREW TERMINAL OF THE DEVICE WITH INHERENT ELECTRICAL ISOLATION FROM MOUNTING STRAP. NORMAL EQUIPMENT GROUNDING CONDUCTOR MOUNTED TO BOX.
K	KEYED
LTG	LIGHTING
LO	CIRCUIT BREAKER HANDLE LOCK ON/OFF
MC	MECHANICAL CONTRACTOR
MCC	MOTOR CONTROL CENTER. "E" DENOTES EMERGENCY
MDF	MAIN DISTRIBUTION FRAME
MDP	MAIN DISTRIBUTION PANEL
MECH	MECHANICAL
MH	METAL HALIDE
MTC	EMPTY CONDUIT
MTD	MOUNTED
MTG	MOUNTING
MCM	NURSE CALL MASTER
NDO	NURSE CALL DATA DISTRIBUTOR
NL	NIGHT LIGHT
OFOI	OWNER FURNISHED, OWNER INSTALLED
PC	PHOTOCELL
PNL	PANEL
PVC	POLYVINYL CHLORIDE
RECPT	RECEPTACLE
REF	REFRIGERATOR
RF	RETURN FAN
RGS	RIGID GALVANIZED STEEL CONDUIT
RH	RANGE HOOD
RP	RECIRCULATING PUMP
RS	RAPID START/PROGRAM START
RTU	ROOFTOP UNIT
SF	SUPPLY FAN
SP	SUMP PUMP
SPST	SINGLE POLE SINGLE THROW
TCP	TEMPERATURE CONTROL PANEL
TEL	TELEPHONE
TFB	TO FLOOR BELOW
TFB	TO FLOOR BELOW
TS	TIME SWITCH
TTB	TELEPHONE TERMINAL BOARD
TTM	MAIN TELEPHONE TERMINAL BOARD (DEMARK)
TV	TELEVISION
TYP	TYPICAL
UH	UNIT HEATER
UV	UNIT VENTILATOR
V	VOLTS
VFD	VARIABLE FREQUENCY DRIVE
VL	VERIFY LOCATION
W	WATTS
WP	WEATHERPROOF
XFMR	TRANSFORMER
XFRS	TRANSFER SWITCH
XP	EXPLOSION PROOF

LEGEND

SECURITY

PLAN MARK	DESCRIPTION
SD	SECURITY DOOR SWITCH
SR	SECURITY CARD READER
CCTV	SECURITY CAMERA W/ OPTIONS PTZ= CENTER PAN TILT ZOOM

POWER

PLAN MARK	DESCRIPTION
	DUPLEX RECEPTACLE - 3 WIRE, 120V 4 = 4 FOURPLEX WP = WEATHER PROOF GF = GROUND FAULT CIRCUIT INTERRUPTER IG = ISOLATED GROUND M = 6" ABOVE MILLWORK BACKSPLASH SS = SURGE SUPPRESSION OUTLET WP = WEATHER PROOF
	EQUIPMENT CONNECTION
	J-BOX
	FLUSH MOUNTED PANELBOARD
	DISCONNECT SWITCH

FIRE ALARM

PLAN MARK	DESCRIPTION
	COMBINATION SMOKE/CARBON MONOXIDE DETECTOR
	COMBINATION ADA HORN/STROBE

COMMUNICATIONS

PLAN MARK	DESCRIPTION
	TELEPHONE RECEPTACLE
CATV	CATV LOCATION

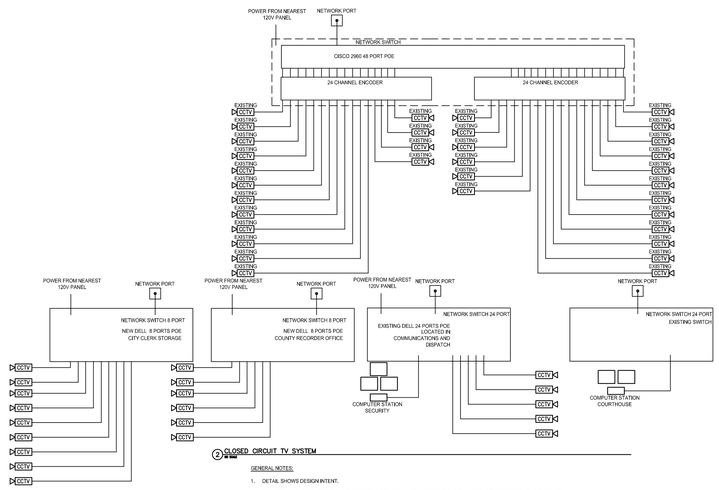

2 CLOSED CIRCUIT TV SYSTEM
NO SCALE

GENERAL NOTES:

1. DETAIL SHOWS DESIGN INTENT.
2. PROVIDE ALL CABLES, DEVICES, AND MOUNTING FOR A FULLY FUNCTIONING SYSTEM. PROVIDE 1 CAT 6 CABLES PER CAMERA LOCTION.
3. CAMERAS SHALL BE SAMSUNG OR ENGINEER APPROVED EQUIVALENT, PER SPECIFICATIONS.
4. COORDINATE EQUIPMENT LOCATIONS WITH OWNER.
5. PROVIDE 12 STRANDS 50 MICRON MULTIMODE FIBER FROM SERVER ROOM NETWORK SWITCH LOCATION TO COURTHOUSE NETWORK SWITCH LOCATIONS.
6. PROVIDE NEW MINI PC IN COURTHOUSE FOR RUNNING THE VIEWING COMPUTER IN THE COURTHOUSE. PROVIDE ALL CABLING AND PROGRAMMING NEEDED FOR FULLY FUNCTIONING STATION.
7. PROVIDE NEW COMPUTER IN SECURITY OFFICE MEETING THE WORKSTATION SPECIFICATION IN THE ACCESS SPECIFICATION FOR VIEWING FROM THE SECURITY OFFICE. THIS IS IN ADDITION TO COMPUTER NEEDED TO RUN ANY SOFTWARE FOR NVR SYSTEM.

SHIVEHATTERY
ARCHITECTURE + ENGINEERING
1701 River Drive, Suite 200 | Moline, Illinois 61265
309.764.7600 | fax: 309.764.8616 | www.shivehattery.com
Iowa | Illinois | Indiana
Illinois Firm Number: 184-000214

SEAL

LICENSED PROFESSIONAL ENGINEER
David M. Tepen
062.051804
STATE OF ILLINOIS
Expires: 11-30-2017

Aug 19 2016 4:24 PM

JO DAVIESS COUNTY COURTHOUSE SECURITY CAMERAS

JO DAVIESS COUNTY
330 N BENCH ST GALENA, IL 61036

DRAWN: AJF
APPROVED: DMT
ISSUED FOR: REVIEW
DATE: 8/2/2016
PROJECT NO: 3182270
FIELD BOOK: --
CLIENT NO: ###

ELECTRICAL SCHEDULES AND DIAGRAMS

E0.01